APHRODITE PROGRAMMABLE MOTORIZED TREADMILL
ITEM NO: 98550

LifeGear

Get active for life

FitShow App

Download on the App Store

GET IT ON Google Play

OWNER'S MANUAL

IMPORTANT: Read all instructions carefully before using this product. Retain this owner's manual for future reference.

The specifications of this product may vary from this photo and are subject to change without prior notice.

2024, Oct.

TABLE OF CONTENTS

WARRANTY ---------- 2

IMPORTANT SAFETY INSTRUCTIONS ---------- 3

PARTS LIST ---------- 5

HARDWARE LIST ----------7

TOOLS ---------- 7

ASSEMBLY COMPONENTS ----------8

LUBRICANT INCLUDED ---------- 8

EXPLODED VIEW ---------- 9

ASSEMBLY INSTRUCTIONS ---------- 10

LIFTING UP & SETTING DOWN THE TREADMILL ---------- 17

MOVING THE TREADMILL ---------- 18

OPERATING THE COMPUTER ---------- 19

COMPATIBLE FITNESS APPLICATION ---------- 28

ERROR MESSAGES ----------30

CARE, MAINTENANCE & TROUBLESHOOTING GUIDE ---------- 31

BELT ADJUSTMENT ---------- 32

LUBRICATION ---------- 33

EMERGENCY STOP ----------33

WARM UP AND COOL DOWN ROUTINE ---------- 34

ONE YEAR LIMITED WARRANTY

LifeGear Inc. warrants to the original purchaser that this product is free from defects in material and workmanship when used for the purpose intended, under the conditions that it has been installed and operated in accordance with LifeGear's Owner's Manual. LifeGear's obligation under this warranty is limited to replacing or repairing free of charge, any parts which may prove to be defective under normal home use. This warranty does not include any damage caused by improper operation, misuse or commercial application. From the date of purchase, the frame is warranted to be free from defects for 1 (one) year. This warranty is offered only to the original owner and is not transferable. Proof of purchase is required.

When ordering replacement parts please have the following information ready:

1. **Owner's Manual**
2. **Model Number**
3. **Description of Parts**
4. **Part Number**
5. **Date of Purchase**

IMPORTANT SAFETY INSTRUCTIONS

Basic precautions, including the following important safety instructions should always be followed when using this treadmill. Read all instructions before using it.

DANGER: To reduce the risk of electric shock, always unplug the treadmill from the electrical outlet immediately after using and before cleaning, assembling, or servicing the treadmill.
Failure to follow these instructions may lead to personal injury and cause damage to the treadmill.

WARNING: To reduce the risk of burns, fire, electric shock or injury to any persons, please read the following:

- Never leave the treadmill unattended while plugged in. Disconnect by turning off the power switch and unplugging from electrical outlet when not in use and before putting on or taking off parts.
- Use this product only for its intended use as described in this manual. Do not use attachments not recommended by the manufacturer.
- Never operate the treadmill if it has a damaged cord or plug, or if it is not working properly. If it has been dropped or damaged, or been exposed to water, return the product to a service center for examination and repair.
- Do not attempt any maintenance or adjustments other than those described in this manual. Should any problems arise, discontinue use and consult an *Authorised Service Representative.*
- Never operate the product with the air openings blocked. Keep the air openings free of lint, hair, and other obstructions.
- Do not use the treadmill outdoors.
- Do not pull the treadmill by its power cord or use the cord as a handle.
- Keep children and pets away from the equipment while in use.
- Elderly or disabled users should only use this treadmill in the presence of an adult who can provide assistance if required.
- Do not operate where aerosol (spray) products are being used or where oxygen is being administered.
- Keep dry - do not operate in a wet or moist condition.
- The motor cover can become hot while the treadmill is in use. Do not place the treadmill on a blanket or other flammable surface as this can create a fire hazard.
- Keep electrical cord away from heated surfaces.
- Keep the treadmill on a solid, level surface with a minimum safety area clearance of two meters around the treadmill. Be sure the area around the treadmill remains clear of any obstructions during use.
- This treadmill is for domestic household use only.
- Only **one** person should use the treadmill at a time.
- Wear comfortable and suitable clothing when using the treadmill. Do not use the treadmill barefoot or in socks. Always wear appropriate athletic footwear. Never wear loose or baggy clothing as it can become caught on the treadmill and create an entrapment hazard.

- Always hold on to the handrails while using the treadmill.
- Always make sure the storage latch is in place when folding and moving the treadmill.
- Do not leave children who are under 12 years-old unsupervised near or on the treadmill.
- To disconnect, turn all controls to the off position, then remove plug from the wall outlet.
- This appliance is not intended for use by persons (including children) with reduced physical, sensory or mental capabilities, or lack of experience and knowledge, unless they have been given supervision or instruction concerning use of the appliance by a person responsible for their safety.
- Children should not be allowed to play on or near the treadmill at any time.
- CAUTION - RISK OF INJURY TO PERSONS - To avoid injury, use extreme caution when stepping onto or off of a moving treadmill belt. Carefully read this instruction manual before use.
- **Maximum Weight Capacity is 130 kg.**
- This unit must be plugged into a nominal 110 volt 50/60Hz outlet which has been grounded.
- Keep hands clear of all moving parts. Never place hands or feet under the treadmill while in use.
- Do not use the treadmill on a carpet that is greater than 1.3 cm in height.
- Before using the treadmill, check that the belt is aligned and centered on the running deck and all visible fasteners on the treadmill are sufficiently tightened and secure.
- Cleaning and user maintenance shall not be made by children without supervision.
- If the supply cord is damaged, it must be replaced by the manufacturer, its service agent or similarly qualified persons in order to avoid a hazard.
- Always face towards the computer console and do not run backwards on the running belt.

WARNING: Before beginning any exercise program consult your physician. This is especially important for people who are over 35 years old or who have pre-existing health problems. Read all instructions before using any fitness equipment. Do not operate this exercise equipment without properly fitted guards, as the moving parts can present a risk of serious injury if exposed.

CAUTION: Read all instructions carefully before operating this product. Retain this Owner's Manual for future reference.

PARTS LIST

No.	Description	Qty	No.	Description	Qty
001	Base Frame	1	025	Cross Recessed Truss Head Screw M4x30	4
002	Incline Bracket	1	026	Nylon Nut M10	6
003	Main Frame	1	027	Nylon Nut M8	6
004	Left Handlebar Support Tube	1	028	Nut M5	8
005	Right Handlebar Support Tube	1	029	Washer M10	14
006	Hexagon Socket Button Head Bolt M10x50	6	030	Washer M8	13
007	Cross Recessed Truss Head Bolt M6x20	2	031	Spring Washer M8	4
008	Hexagon Socket Button Head Bolt M10x60	1	032	Cross Recessed Pan Head Tapping Screw M4x12	14
009	Hexagon Socket Button Head Bolt M10x40	3	033	Hexagon Socket Round Head Cap Bolt M8x65	2
010	Hexagon Socket Button Head Bolt M10x45	2	034	Cross Recessed Countersunk Head Drilling Screw M4x35	4
011	Hexagon Socket Button Head Bolt M8x45	1	035	Cross Recessed Pan Washer Head Tapping Screw M3x6	2
012	Hexagon Socket Button Head Bolt M8x40	2	036	Cross Recessed Round Washer Head Tapping Screw M4x8	2
013	Hexagon Socket Button Head Bolt M8x28	1	037	Safety Tether Key	1
014	Hexagon Socket Button Head Bolt M8x50	2	038	Motor Cover	1
015	Hexagon Socket Round Head Cap Bolt M8x15	4	039	Logo Cap Cover	1
016	Hexagon Socket Round Head Cap Bolt M8x90	1	040	Rear End Cover	1
017	Hexagon Socket Round Head Cap Bolt M8x55	1	041	Left Handlebar Support Tube Cover	1
018	Hexagon Socket Countersunk Head Bolt M6x25	8	042	Right Handlebar Support Tube Cover	1
019	Cross Recessed Truss Head Bolt M5x28	8	043	Transport Wheel Cap	2
020	Cross Recessed Truss Head Bolt M6x10	4	044	Side Rail	2
021	Cross Recessed Truss Head Bolt M5x12	12	045	Cross Recessed Round Head Drilling Screw M4x35	2
022	Hexagon Socket Button Head Bolt M8x15	8	046	Computer Bracket	1
023	Cross Recessed Pan Washer Head Drilling Screw M4x12	6	047	Belt 180J6	1
024	Cross Recessed Truss Head Screw M4x10	2	048	Deck Bumper Ø25x25 (M6)	6

PARTS LIST

No.	Description	Qty	No.	Description	Qty
049	Adjustable Leveler M8	4	071	Wire Grommet Ø24xØ15x6	1
050	Transport Wheel Ø44xØ8.5x18	2	072	Bushing Ø12xØ8.5x10	4
051	Wheel Ø51xØ8.5x22	2	073	Plastic Flexible Tube	1
052	Handlebar End Cap (20x40)	2	074	Blue AC Wire (L=400 mm)	1
053	Handlebar Foam Grip Ø31xT5.0x300	2	075	Brown AC Wire (L=400 mm)	1
054	Running Deck	1	076	Brown AC Wire (L=100 mm)	1
055	Running Belt	1	077	Power Cord (L=1500 mm)	1
056	Dish Washer Ø22xØ5x9	8	078	Rubber Pad 98x35xT2.0	2
057	Power Socket	1	079	Sensor	1
058	Base Frame Bumper Ø22x16	2	080	Sensor Bracket	1
059	Motor	1	081	Motor Bracket	1
060	Power Control Board	1	082	Cross Bar	1
061	Power Switch	1	083	Air Cushion	2
062	Fuse Box	1	084	Shock Absorption Bumper	4
063	Ring for Cable	1	085	Lower Computer Cover	1
064	Incline Motor	1	086	Extension Control Wire (L=1300 mm)	1
065	Front Roller Ø15xØ50xØ100x570	1	087	Control Wire (L=550 mm)	1
066	Rear Roller Ø15xØ42x567	1	088	Rectangular End Cap (20x40)	4
067	Foot Lock Latch Tube	1	089	Cap Ø24xØ20x10.5	1
068	Hand Pulse Sensor with Incline Control Buttons	1	090	Plastic Bushing Ø20xØ12xØ10x4	4
069	Hand Pulse Sensor with Speed Control Buttons	1	091	Plastic Bushing Ø18xØ12xØ10x7	2
070	Wire Clip	1			

No.	Description			Qty
092	Computer Console			1 Set
	92A	Upper Computer Cover	1	
	92B	Computer Power Control Board	1	
	92C	Cross Recessed Pan Washer Head Tapping Screw M3x6	20	
	92D	Computer Panel	1	
	92E	Cross Recessed Truss Head Tapping Screw M4x10	7	
	92F	Speaker	2	
	92G	Right Bottle Holder	1	
	92H	Left Bottle Holder	1	
	92I	Pad	1	

HARDWARE LIST

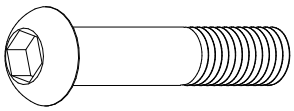

(6) Hexagon Socket Button Head Bolt M10x50
6 PCS

(21) Cross Recessed Truss Head Bolt M5x12
4 PCS

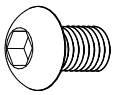

(22) Hexagon Socket Button Head Bolt M8x15
8 PCS

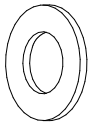

(29) Washer M10
6 PCS

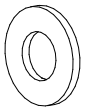

(30) Washer M8
8 PCS

TOOLS

Hex Socket Wrench with Phillips Screwdriver
1 PC

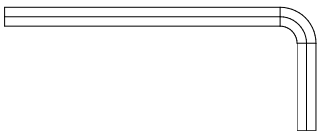

Allen Wrench 5 mm
1 PC

Allen Wrench 6 mm
1 PC

ASSEMBLY COMPONENTS

(37) Safety Tether Key
1 PC

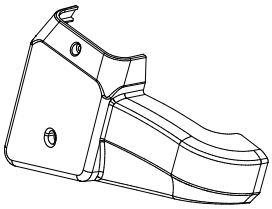

(41) Left Handlebar
Support Tube Cover
1 PC

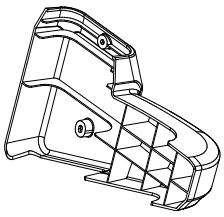

(42) Right Handlebar
Support Tube Cover
1 PC

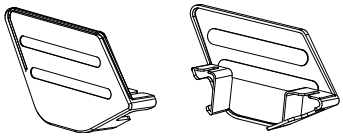

(43) Transport Wheel Cap
2 PCS

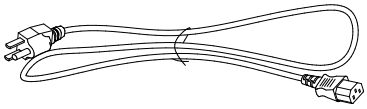

(77) Power Cord
1 PC

LUBRICANT INCLUDED

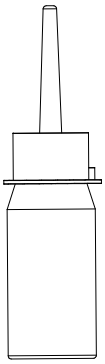

Lubricant
1 PC

EXPLODED VIEW

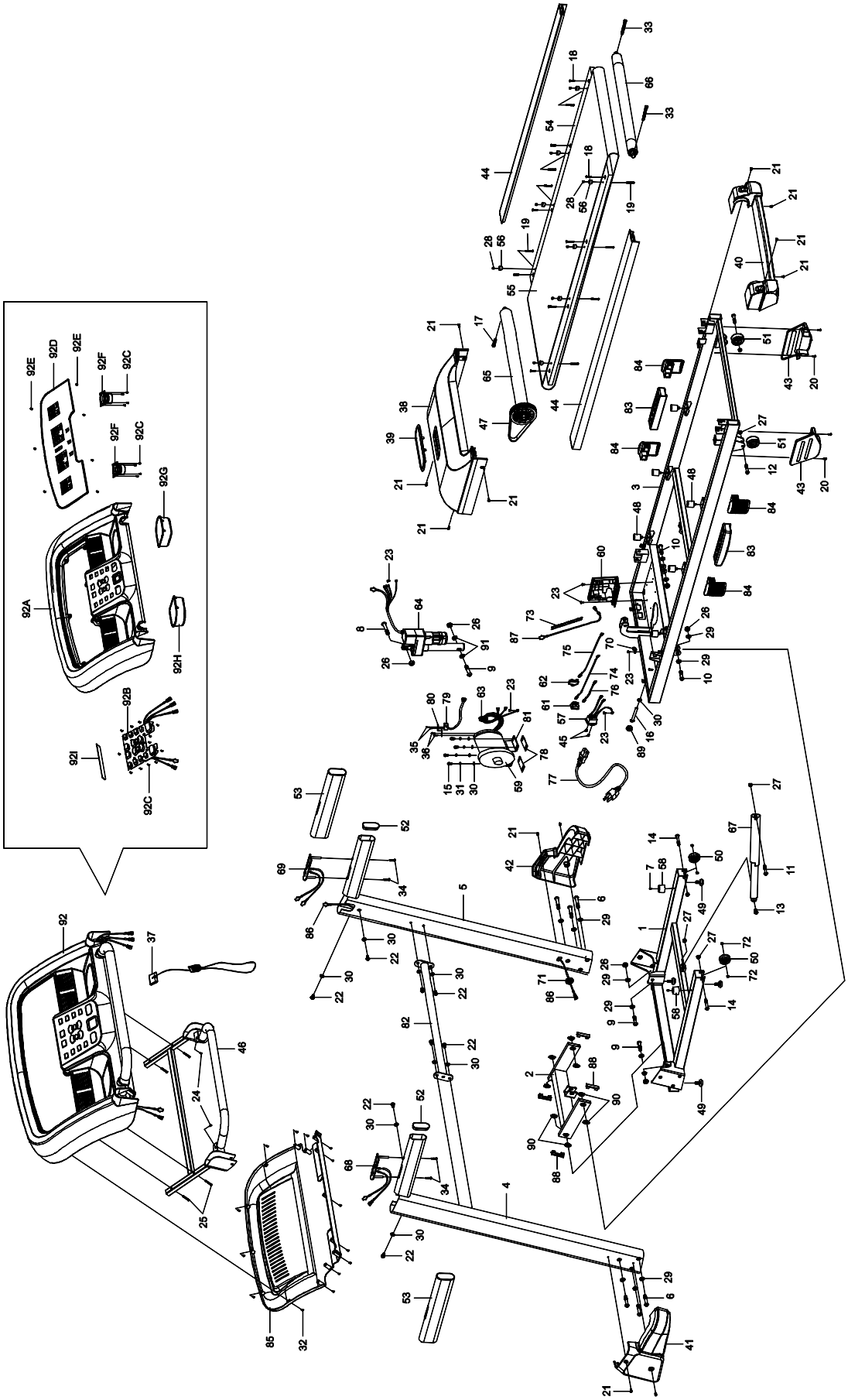

ASSEMBLY INSTRUCTIONS

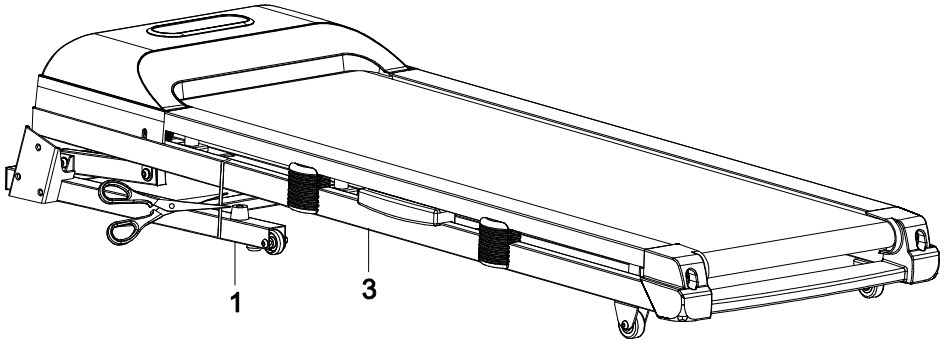

Step 1
Remove the treadmill from the carton and place it on a level flat surface. **It is recommended that you always use the aid of a second person when removing the treadmill from the carton.**
Cut the strap with a pair of scissors.

NOTE: DO NOT CUT THE STRAP BEFORE MOVING THE TREADMILL OUT FROM THE CARTON. FAILURE TO DO SO COULD RESULT IN BODY INJURY.

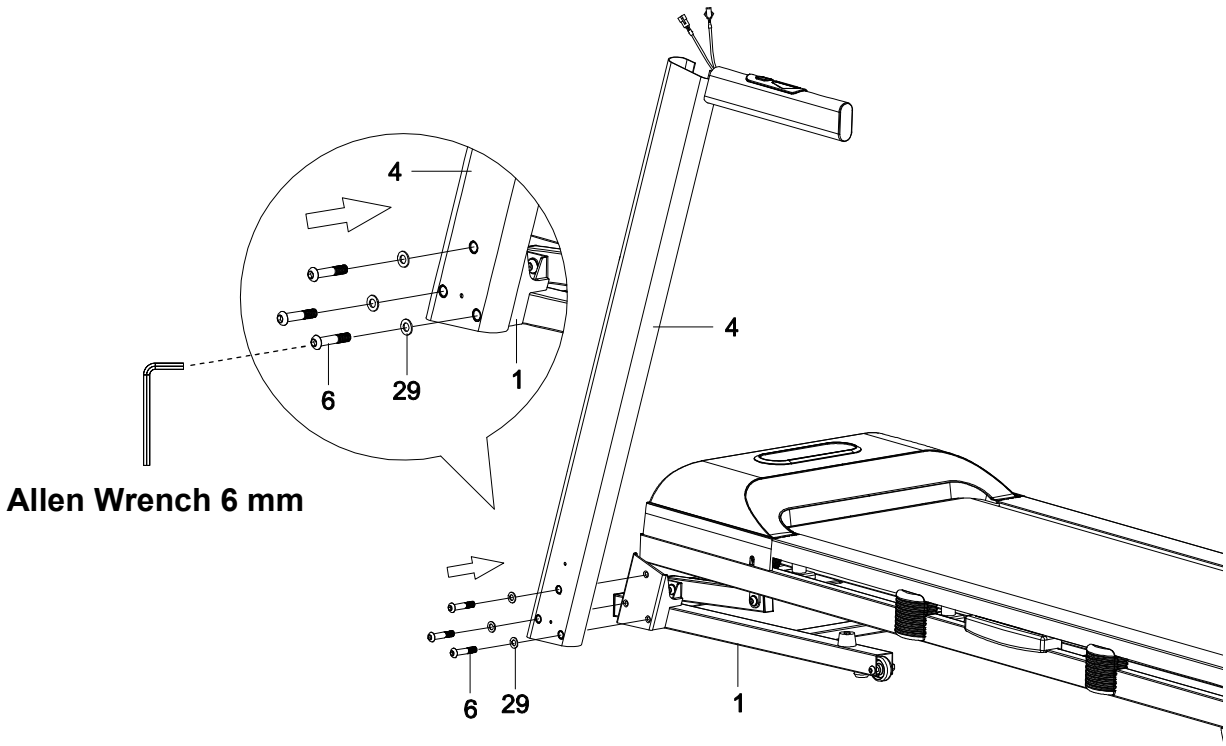

Step 2
Attach the Left Handlebar Support Tube (4) onto the Base Frame (1) with three M10x50 Hexagon Socket Button Head Bolts (6) and three M10 Washers (29). Semi-tighten bolts with the 6 mm Allen Wrench provided.

NOTE: DO NOT FULLY TIGHTEN BOLTS IN STEP 2 UNTIL THE STEP 5 IS COMPLETE.

Hardware:

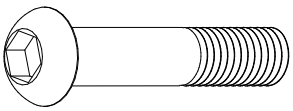

(6) Hexagon Socket Button Head Bolt M10x50
3 PCS

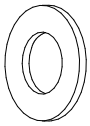

(29) Washer M10
3 PCS

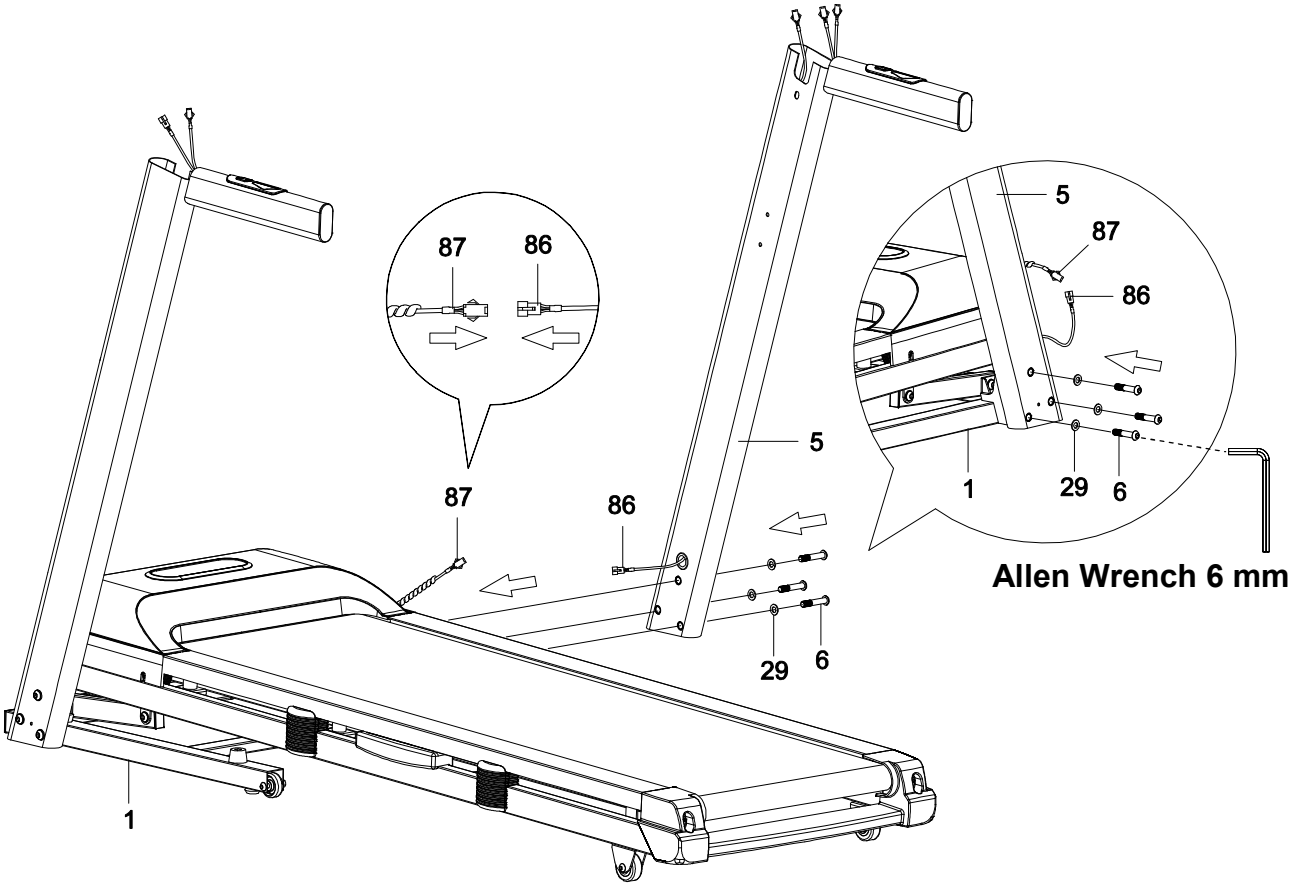

Step 3

It is recommended to have a second person assist with this step. One person should hold the Right Handlebar Support Tube (5) in place while the other person connects the wires. Connect the Control Wire (87) from the Base Frame (1) to the Extension Control Wire (86) that comes from the Right Handlebar Support Tube (5).

Attach the Right Handlebar Support Tube (5) onto the Base Frame (1) with three M10x50 Hexagon Socket Button Head Bolts (6) and three M10 Washers (29). Semi-tighten bolts with the 6 mm Allen Wrench provided.

NOTE: DO NOT FULLY TIGHTEN BOLTS IN STEP 3 UNTIL THE STEP 5 IS COMPLETE.

Hardware:

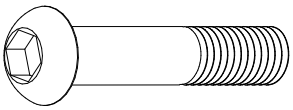

(6) Hexagon Socket Button Head Bolt M10x50
3 PCS

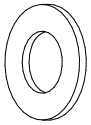

(29) Washer M10
3 PCS

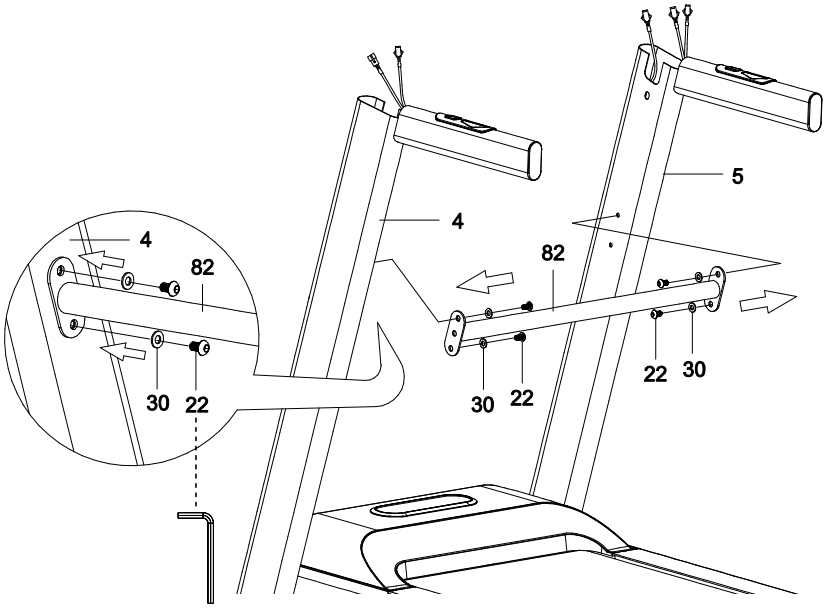

Allen Wrench 5 mm

Step 4
Attach the Cross Bar (82) onto the both Left/Right Handlebar Support Tubes (4, 5) with four M8x15 Hexagon Socket Button Head Bolts (22) and four M8 Washers (30). Semi-tighten bolts with the 5 mm Allen Wrench provided.

NOTE: DO NOT FULLY TIGHTEN BOLTS IN STEP 4 UNTIL THE STEP 5 IS COMPLETE.

Hardware:

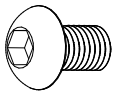

(22) Hexagon Socket Button Head Bolt M8x15
4 PCS

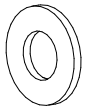

(30) Washer M8
4 PCS

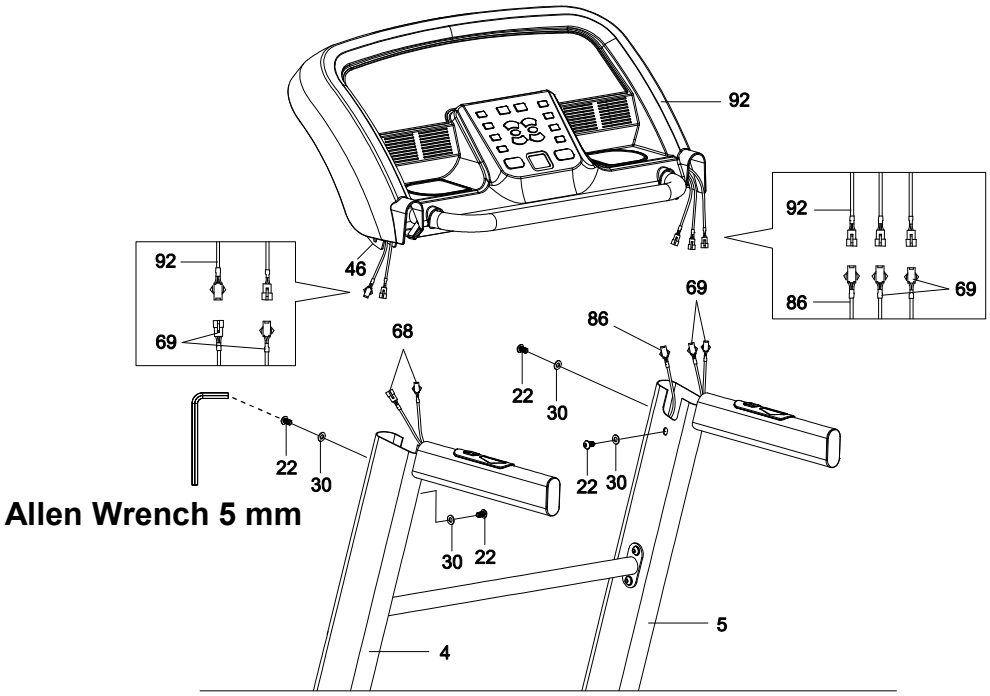

Step 5

It is recommended to have a second person assist with this step. One person should hold the Computer Console (92) with Computer Bracket (46) in place while the other person connects the wires.

Connect the Hand Pulse Sensor Wire with Incline Control Button Wire (68) from the Left Handlebar Support Tube (4) to the wires that come from the Computer Console (92).

Connect the Hand Pulse Sensor Wire with Speed Control Button Wire (69) and Extension Control Wire (86) from the Right Handlebar Support Tube (5) to the wires that come from the Computer Console (92).

Secure the Computer Bracket (46) to the both Left/Right Handlebar Support Tubes (4, 5) with four M8x15 Hexagon Socket Button Head Bolts (22) and four M8 Washers (30). Tighten bolts with the 5 mm Allen Wrench provided.

IMPORTANT: While sliding the Computer Bracket (46) into the both Left/Right Handlebar Support Tubes (4, 5), make sure the wires are installed inside the bothLeft/Right Handlebar Support Tubes (4, 5) and pay attention not to pinch the wires.

NOTE: PLEASE FULLY TIGHTEN BOLTS INSTALLED IN STEP 2 TO STEP 5 WITH THE TOOLS PROVIDED.

Hardware:

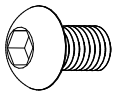

(22) Hexagon Socket Button Head Bolt M8x15
4 PCS

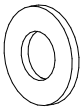

(30) Washer M8
4 PCS

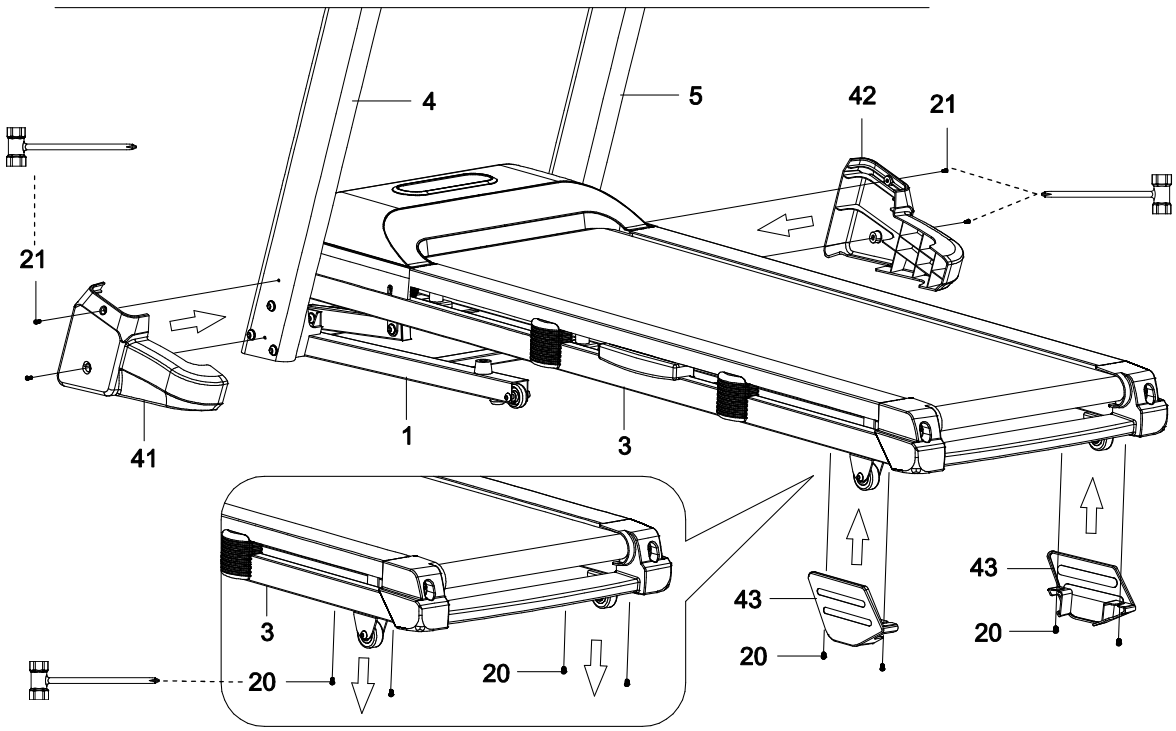

Step 6
Attach the both Left/Right Handlebar Support Tube Covers (41, 42) onto the both Left/Right Handlebar Support Tubes (4, 5) with four M5x12 Cross Recessed Truss Head Bolts (21). Tighten bolts with the Hex Socket Wrench with Phillips Screwdriver provided.
Remove four M6x10 Cross Recessed Truss Head Bolts (20) from the Main Frame (3). Remove bolts with the Hex Socket Wrench with Phillips Screwdriver provided.
Attach the both Transport Wheel Caps (43) onto the Main Frame (3) with four M6x10 Cross Recessed Truss Head Bolts (20) that were removed. Tighten bolts with the Hex Socket Wrench with Phillips Screwdriver provided.

Hardware & Assembly Components:

(21) Cross Recessed Truss Head Bolt M5x12
4 PCS

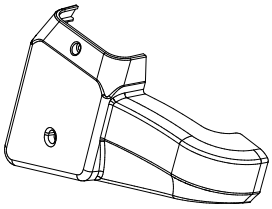

(41) Left Handlebar Support Tube Cover
1 PC

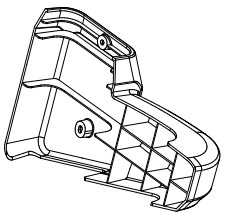

(42) Right Handlebar Support Tube Cover
1 PC

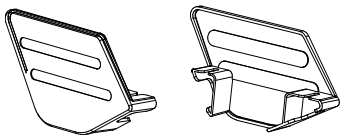

(43) Transport Wheel Cap
2 PCS

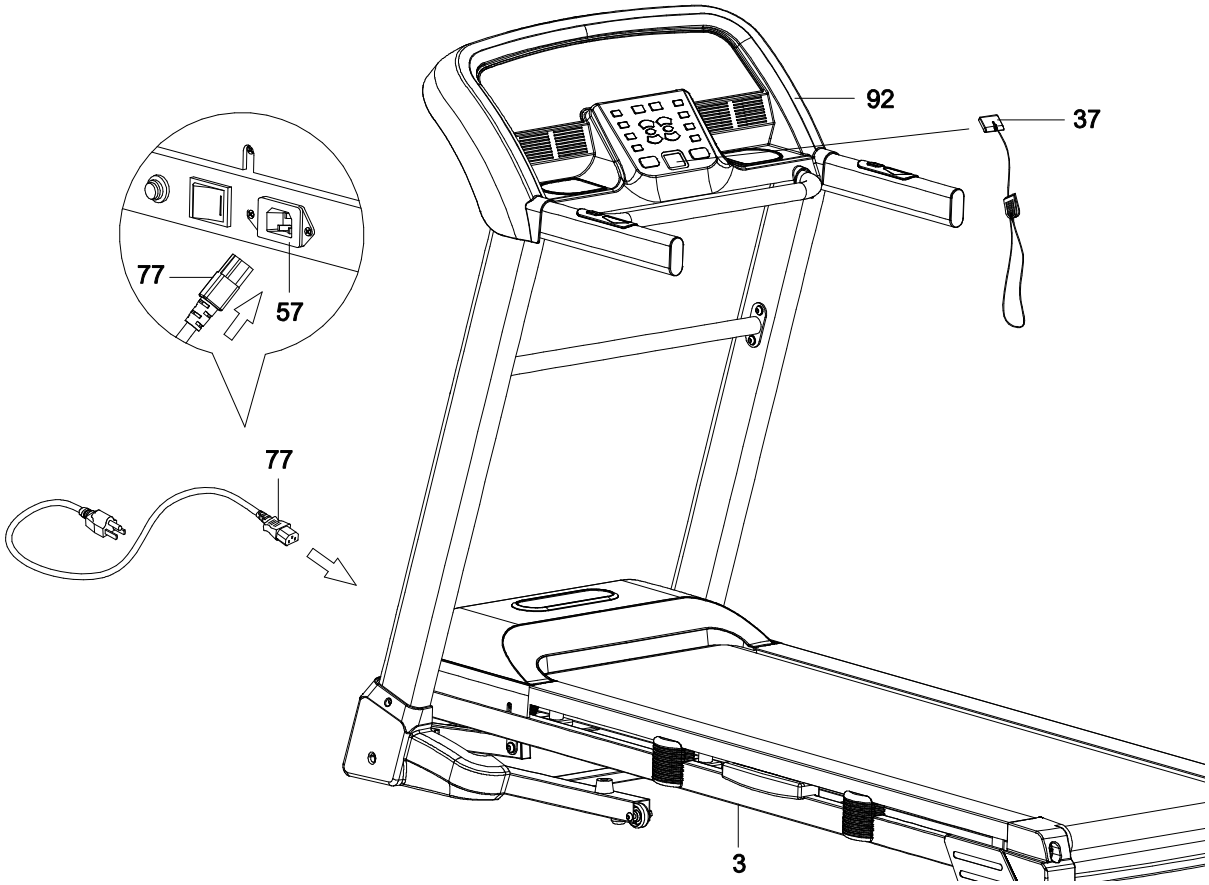

Step 7
Place the Safety Tether Key (37) onto the Computer Console (92).
Plug the indicated end of the Power Cord (77) into the Power Socket (57) on the treadmill.

Assembly Components:

(37) Safety Tether Key
1 PC

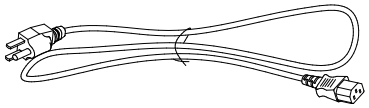

(77) Power Cord
1 PC

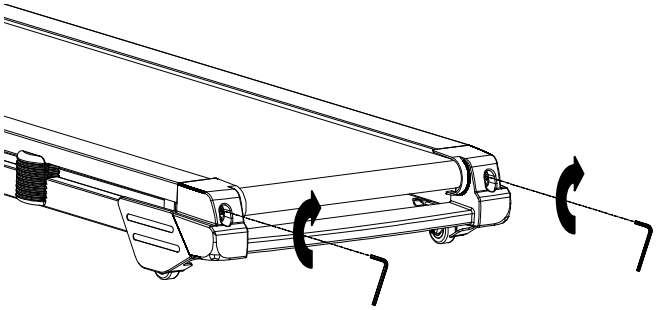

Tool:

Allen Wrench 6 mm

Step 8
The running belt has been adjusted to the running deck at the factory before it was shipped. At times the running belt may get slippery during shipment. After the treadmill is completely assembled, use the 6 mm Allen Wrench to turn the both left and right rear roller adjustment bolts 1/4 turn clockwise before using the treadmill.

LIFTING UP & SETTING DOWN THE TREADMILL

LIFTING UP THE TREADMILL

Firmly grasp the rear end of the Main Frame with both hands. Carefully lift the end of the treadmill up into the upright position until the Foot Lock Latch engages and securely locks the main frame into position. Make sure the main frame is securely latched before moving the treadmill. See figures A and B.

Store the treadmill in a clean and dry environment away from children.

A

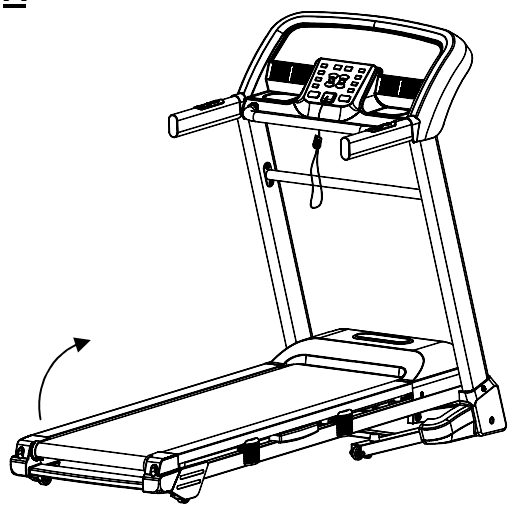

B

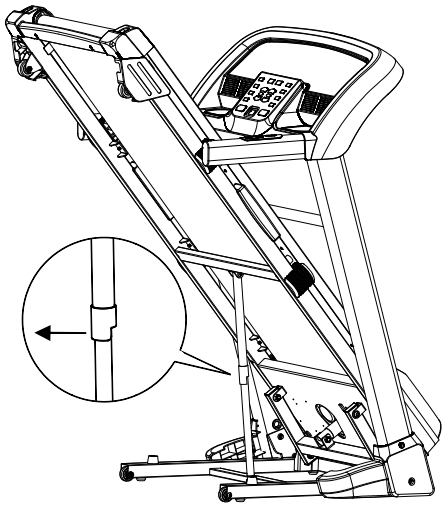

SETTING DOWN THE TREADMILL

To set down the treadmill, firmly grasp the rear end of the treadmill with both hands. Gently kick on the Foot Lock Latch with your foot until the lock latch disengages. Carefully lower the deck to the ground. See figures C and D.

NOTE: DO NOT STAND UNDER THE DECK WHEN SETTING DOWN THE TREADMILL. TO PREVENT INJURY, PLEASE MAKE SURE YOU HAVE A FIRM HOLD WHEN LIFTING UP OR SETTING DOWN THE DECK.

C

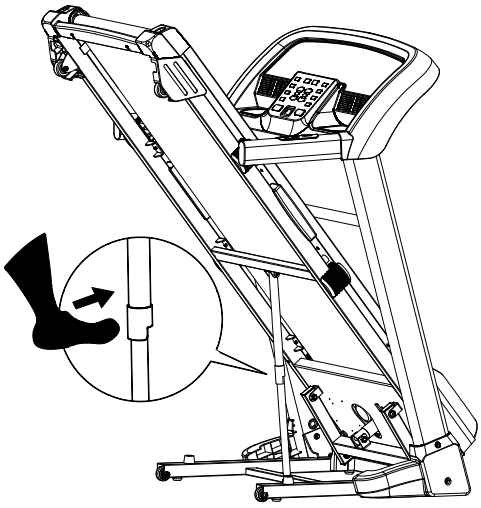

D

MOVING THE TREADMILL

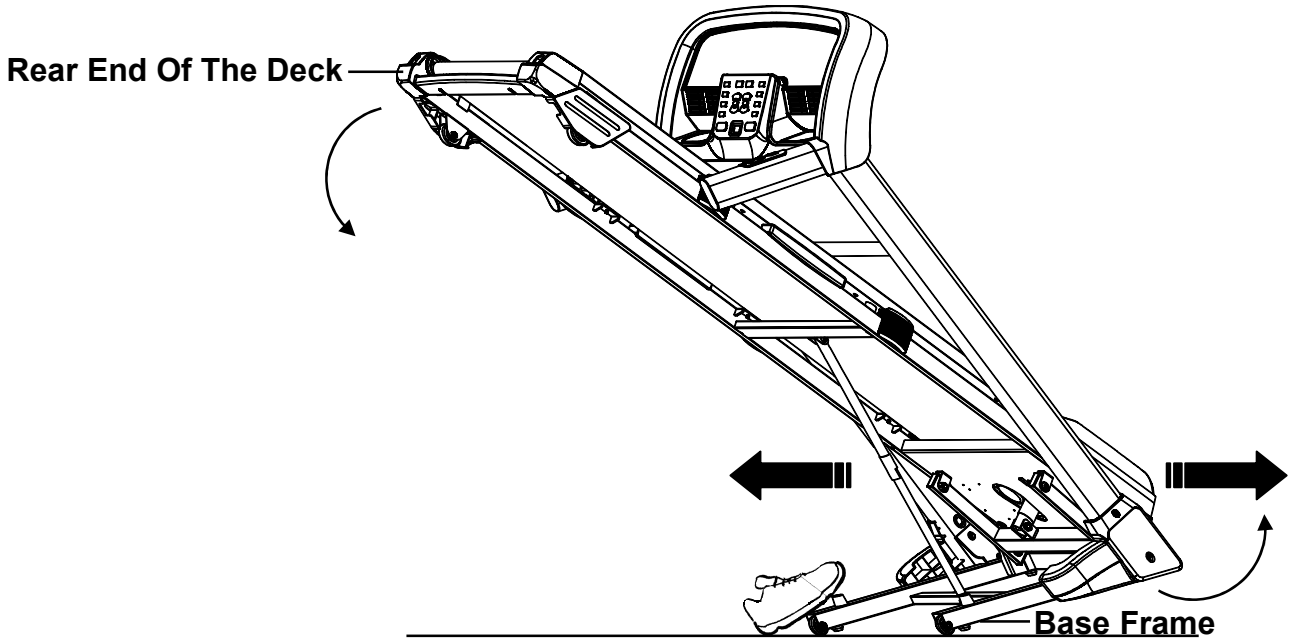

The unit can be carefully tilted onto its transport wheels for easy moving and storage. With the treadmill in the folded locked position (foot lock latch is engaged), firmly grasp the Rear End Of The Deck with both hands and place one foot on the Base Frame. Next, carefully tilt the treadmill back until it rolls freely on the transport wheels.
To set the treadmill down, place one foot on the Base Frame and carefully lower treadmill onto base in the folded position.

CAUTION: THE TREADMILL IS HEAVY, IT IS SUGGESTED YOU ALWAYS USE THE AID OF A SECOND PERSON WHEN MOVING THE TREADMILL. DO NOT ATTEMPT TO MOVE THE TREADMILL WHILE IT IS IN THE UNFOLDED POSITION.

OPERATING THE COMPUTER

Flip the Master Power Switch that is located at the front of the treadmill to the ON position. Before beginning a workout session ensure that the Safety Tether Key is properly placed onto the Computer Console and the Safety Clip is securely attached to an article of your clothing.

NOTE: Always stand on the side rails when you start the treadmill, never start the treadmill while you are standing on the running belt.

QUICK START:

Press the START button on the computer to begin exercising, the computer screen will countdown 3 seconds before the running belt starts moving. The running belt starts moving with an initial speed of 1.0 KPH. You may press the SPEED + or SPEED − button on the computer console to increase or decrease the running speed during exercise. The the split window of SPEED will display your current running speed from the minimum 1.0 KPH to the maximum 18.0 KPH. You may also press one of the INSTANT SPEED buttons (3 / 6 / 9) on the computer console and the split window of SPEED will display the speed that you have pressed and the running speed will change to 3 KPH, 6 KHP, or 9 KPH respectively. You may press the INCLINE ▲ or INCLINE ▼ button on the computer console to increase or decrease the incline level during exercise. Each increment or decrement is 1 level. The incline adjustment available range is from 0 to 15 levels. You may also press one of the INSTANT INCLINE buttons (3 / 6 / 9) on the computer console and the split window of INCLINE will display the incline level that you have pressed and the incline level will change to 3-level, 6-level, or 9-level respectively. The split window of TIME will display your elapsed workout time in minutes and seconds. The split window of DIS. (DISTANCE) will display the accumulative distance travelled during workout. The split window of CAL. (CALORIE) will display the total accumulated calories burned during workout. The split window of PULSE will display your current heart rate in beats per minute (BPM). To activate, grip the hand pulse sensors on both handlebars during exercise and the pulse will display after 2-5 seconds. For a more accurate reading, grip pulse sensors with both hands. During workout, you may press the STOP button on the computer console to pause the treadmill running at any time. Press the START button to resume the program and all displays will continue the performance until the program finishes. Press the STOP button twice to stop the treadmill running and all data values on the computer will reset to zero.

BUTTON FUNCTIONS:

START: Press the START button to begin exercising.

STOP: Press the STOP button to stop/pause your workout.

MODE: Press the MODE button to select one of the functions (TIME, DISTANCE, or CALORIE) for setting exercise target in Manual Program Mode before training.
Press the MODE button to select a intensity level from L1 to L8 in Pre-Set Program Mode (P1-P8) before training.
To confirm the exercise time, speed, and incline level in Custom User Program Mode (U-1-U-3).
Press the MODE button to enter into the Body Fat Calculator Program Mode and confirm the setting for user's gender, age, height, and weight.

PROG (PROGRAM): To select your chosen program (P1-P8 Pre-Set Program, U-1-U-3 Custom User Program, or Body Fat Calculator Program).

SPEED ＋: To make upward adjustments for pre-setting target training TIME, DISTANCE, or CALORIE in Manual Program Mode before training.
To make upward adjustments for pre-setting target training TIME in Pre-set Program Mode (P1-P8) before training.
To make upward adjustment for pre-setting target training time and running speed in custom user program mode (U-1-U-3).
To make upward adjustment for setting user’s gender, age, height, and weight in Body Fat Calculator Program Mode.
Makes speed adjustments during all training periods on different training modes.

SPEED －: To make backward adjustments for pre-setting target training TIME, DISTANCE, or CALORIE in Manual Program Mode before training.
To make backward adjustments for pre-setting target training TIME in Pre-set Program Mode (P1-P8) before training.
To make backward adjustment for pre-setting target training time and running speed in custom user program mode (U-1-U-3).
To make backward adjustment for setting user’s gender, age, height, and weight in Body Fat Calculator Program Mode.
Makes speed adjustments during all training periods on different training modes.

INSTANT SPEED (3 / 6 / 9): Used to reach desired speed more quickly.

INCLINE ▲: To make upward adjustment for incline level in Custom User Program Mode (U-1-U-3).
Makes incline adjustments during all training periods on different training modes.

INCLINE ▼: To make backward adjustment for incline level in Custom User Program Mode (U-1-U-3).
Makes incline adjustments during all training periods on different training modes.

INSTANT INCLINE (3 / 6 / 9): Used to reach desired incline level more quickly.

BLUETOOTH CONNECTION:

Stream music from your mobile device (smart phone/tablet) to the built-in speakers via Bluetooth. To connect the built-in speakers via Bluetooth, please go to your mobile device's settings section and turn on the **BLUETOOTH** function. Tap **RUN MUSIC** to connect. Make sure that Bluetooth is enabled on your mobile device and the treadmill is within the Bluetooth connection range of your mobile device.

The **BLUETOOTH PHONE** indicator lights up on the computer screen when the BLUETOOTH connection is established.

DISPLAY FUNCTIONS:

TIME: Displays your elapsed workout time in minutes and seconds.

SPEED: Displays the current training speed.

DIS. (DISTANCE): Displays the accumulative distance travelled during your workout.

CAL. (CALORIE): Displays the total calories burned during your workout.

INCL. (INCLINE): Displays the incline level from the minimum 0-level to the maximum 15-level.

PULSE: Displays your current heart rate in beats per minute (BPM). To activate, grip the hand pulse sensors during exercise and the pulse will display after 2-5 seconds. For a more accurate reading, grip pulse sensors with both hands.

TRAINING IN MANUAL PROGRAM MODE (COUNT DOWN OPERATION):

On this count down operation, only one of the function of TIME, DISTANCE, or CALORIE can be set count-down for your workout, the others will count up during your workout.

Press the MODE button on the computer console until you see the split window of TIME (H-1) begin blinking in Manual Program Mode. Press the SPEED + or SPEED − button on the computer console to change the setting. Each increment is 1 minute. The pre-set target time range is from 5:00 to 99:00 minutes, the default time is 30:00 minutes. If you do not want to set TIME for count-down, just directly press the MODE button again, the split window of DIS.(H-2) will begin blinking. Press the SPEED + or SPEED − button on the computer console to change the setting. The pre-set target distance range is from 1.0 to 99.0 km, the default distance is 1.0 km. If you do not want to set DIS. (H-2) for count-down, just directly press the MODE button again, the split window of CAL. (H-3) will begin blinking. Press the SPEED + or SPEED − button on the computer console to change the setting. The pre-set target calories range is from 20 KCAL to 990 KCAL. After finishing setting one of the function of TIME, DIS. (DISTANCE), or CAL. (CALORIE)

for count-down, press the START button on the computer to begin exercising, the computer screen will countdown 3 seconds before the running belt starts moving. The running belt starts moving with an initial speed of 1.0 KPH. You may press the SPEED + or SPEED — button on the computer console to increase or decrease the running speed during exercise. When one of the function of TIME, DIS. (DISTANCE), or CAL. (CALORIE) counts down to 0, the computer will beep to alert you and the treadmill will stop automatically.

TRAINING IN PRE-SET PROGRAM MODE (P1-P8):

All the pre-set programs are made up with 18 intervals, the speed is pre-set on each interval. The elapse time of 18 intervals on each program will be automatically arranged according to the time you set for your workout time. There are 64 pre-set programs for 8 different training goals, and 8 different intensity levels on each training goals.

Press the PROG (PROGRAM) button to select your chosen workout (P1 to P8). Press the SPEED + or SPEED — button to change the time setting. The per-set elapsing time of each per-set program is 30: 00 minutes. Press the MODE button to select a intensity level from L1 to L8. Press the START button to confirm and start your workou, the computer screen will countdown 3 seconds before the running belt starts moving. The running speed and incline level will change automatically during the workout (as shown below). The program is split evenly into 18 intervals. When the pre-set training program time counts down to 0:00, the computer will beep to alert you and the treadmill will stop automatically.

P1. WEIGHT LOST

INTERVAL		1	2	3	4	5	6	7	8	9	10	11	12	13	14	15	16	17	18
L1	SPEED (KPH)	1	2	2	3	3	3	4	5	6	6	7	6	5	4	4	3	2	2
L2	SPEED (KPH)	1	2	2	3	4	4	5	6	8	8	10	8	8	5	5	3	2	2
L3	SPEED (KPH)	1	2	3	4	5	5	6	8	9	10	12	10	8	7	6	4	3	2
L4	SPEED (KPH)	1	2	3	4	6	7	8	10	11	12	13	11	10	8	7	5	4	2
L5	SPEED (KPH)	2	3	4	5	7	7	8	10	12	14	14	13	12	10	9	6	4	2
L6	SPEED (KPH)	2	3	4	5	7	9	10	12	13	14	14	13	12	10	9	6	5	3
L7	SPEED (KPH)	2	3	5	6	8	9	10	12	13	14	15	13	12	10	9	6	6	3
L8	SPEED (KPH)	2	3	5	6	8	10	12	14	14	15	15	14	13	11	9	7	6	3

P2. CARDIO TRAIN

INTERVAL		1	2	3	4	5	6	7	8	9	10	11	12	13	14	15	16	17	18
L1	INCLINE LEVEL	1	1	2	3	4	5	6	7	7	8	8	7	7	5	4	2	1	1
	SPEED (KPH)	1	1	2	2	3	4	5	6	6	7	7	6	6	4	3	2	1	1
L2	INCLINE LEVEL	1	2	3	4	5	6	7	8	8	9	9	8	8	6	5	3	2	1
	SPEED (KPH)	1	2	2	3	4	5	6	7	7	8	8	7	7	5	4	2	2	1
L3	INCLINE LEVEL	1	2	4	5	6	7	8	9	9	10	10	9	9	7	6	4	2	1
	SPEED (KPH)	1	2	3	4	5	6	7	8	8	9	9	8	8	6	5	3	2	1
L4	INCLINE LEVEL	2	3	5	6	7	8	9	10	10	11	11	10	10	8	7	5	3	2
	SPEED (KPH)	2	2	4	5	6	7	8	9	9	10	10	9	9	7	6	4	2	2
L5	INCLINE LEVEL	2	4	6	7	8	9	10	11	11	12	12	11	11	9	8	6	4	2
	SPEED (KPH)	2	3	5	6	7	8	9	10	10	11	11	10	10	8	7	5	3	2
L6	INCLINE LEVEL	3	5	7	8	9	10	11	12	12	13	13	12	12	10	9	7	5	3
	SPEED (KPH)	2	4	6	7	8	9	10	11	11	12	12	11	11	9	8	6	4	2
L7	INCLINE LEVEL	4	6	8	9	10	11	12	13	13	14	14	13	13	11	10	8	6	4
	SPEED (KPH)	3	5	7	8	9	10	11	12	12	13	13	12	12	10	9	7	5	3
L8	INCLINE LEVEL	5	7	9	10	11	12	13	14	14	15	15	14	14	12	11	9	7	5
	SPEED (KPH)	4	6	8	9	10	11	12	13	13	14	14	13	13	11	10	8	6	4

P3. FAT BURN

INTERVAL		1	2	3	4	5	6	7	8	9	10	11	12	13	14	15	16	17	18
L1	INCLINE LEVEL	1	1	2	2	3	3	4	5	5	5	5	4	4	3	2	2	1	1
	SPEED (KPH)	1	2	3	3	5	6	7	8	8	8	8	7	7	5	4	3	2	1
L2	INCLINE LEVEL	1	1	2	2	3	4	5	6	6	6	6	5	5	4	3	2	1	1
	SPEED (KPH)	1	2	3	4	6	7	8	9	9	9	9	8	8	6	5	3	2	1
L3	INCLINE LEVEL	1	1	2	3	4	5	6	7	7	7	7	6	6	4	3	2	1	1
	SPEED (KPH)	1	2	4	5	7	8	9	10	10	10	10	9	9	7	6	4	2	1
L4	INCLINE LEVEL	1	2	3	4	5	6	7	8	8	8	8	7	7	5	4	3	2	1
	SPEED (KPH)	2	3	5	6	8	9	10	11	11	11	11	10	10	8	7	5	3	2
L5	INCLINE LEVEL	1	2	3	4	6	7	8	9	9	9	9	8	8	6	5	3	2	1
	SPEED (KPH)	2	4	6	7	9	10	11	12	12	12	12	11	11	9	8	6	4	2
L6	INCLINE LEVEL	2	3	4	5	7	8	9	10	10	10	10	9	9	7	6	4	3	2
	SPEED (KPH)	3	5	7	8	10	11	12	13	13	13	13	12	12	10	9	7	5	3
L7	INCLINE LEVEL	2	3	5	6	8	9	10	11	11	11	11	10	10	8	7	5	3	2
	SPEED (KPH)	4	6	8	9	11	12	13	14	14	14	14	13	13	11	10	8	6	4
L8	INCLINE LEVEL	2	4	6	7	9	10	11	12	12	12	12	11	11	9	8	6	4	2
	SPEED (KPH)	4	7	9	10	12	13	14	15	15	15	15	14	14	12	11	9	7	4

P4. POWER WALK

INTERVAL		1	2	3	4	5	6	7	8	9	10	11	12	13	14	15	16	17	18
L1	SPEED (KPH)	1	1	2	2	3	3	4	4	4	4	4	4	3	2	2	2	1	1
L2	SPEED (KPH)	1	2	2	2	3	3	4	4	5	4	4	4	3	3	2	2	1	1
L3	SPEED (KPH)	1	2	2	3	3	4	4	5	5	5	4	4	4	3	3	2	1	1
L4	SPEED (KPH)	1	2	3	3	3	4	4	5	6	6	5	4	4	4	3	2	2	1
L5	SPEED (KPH)	1	2	3	4	4	5	5	5	6	6	6	5	4	4	4	3	2	1
L6	SPEED (KPH)	1	2	3	4	5	5	6	6	6	6	6	5	5	4	4	3	2	1
L7	SPEED (KPH)	1	2	3	4	5	6	6	7	7	6	6	6	5	5	4	3	2	1
L8	SPEED (KPH)	1	2	3	4	5	6	7	7	7	7	6	6	6	5	5	4	2	1

P5. INTERVAL

INTERVAL		1	2	3	4	5	6	7	8	9	10	11	12	13	14	15	16	17	18
L1	SPEED (KPH)	1	2	4	2	4	2	4	2	4	2	4	2	4	2	4	2	4	2
L2	SPEED (KPH)	1	2	5	2	5	2	5	2	5	2	5	2	5	2	5	2	5	2
L3	SPEED (KPH)	1	2	6	2	6	2	6	2	6	2	6	2	6	2	6	2	6	2
L4	SPEED (KPH)	1	3	6	3	6	3	6	3	6	3	6	3	6	3	6	3	6	3
L5	SPEED (KPH)	1	3	7	3	7	3	7	3	7	3	7	3	7	3	7	3	7	3
L6	SPEED (KPH)	2	4	7	4	7	4	7	4	7	4	7	4	7	4	7	4	7	4
L7	SPEED (KPH)	2	4	8	4	8	4	8	4	8	4	8	4	8	4	8	4	8	4
L8	SPEED (KPH)	2	5	8	5	8	5	8	5	8	5	8	5	8	5	8	5	8	5

P6. ROLLING

INTERVAL		1	2	3	4	5	6	7	8	9	10	11	12	13	14	15	16	17	18
L1	SPEED (KPH)	1	2	3	2	1	2	3	2	1	2	3	2	1	2	3	2	1	1
L2	SPEED (KPH)	2	3	4	3	2	3	4	3	2	3	4	3	2	3	4	3	2	2
L3	SPEED (KPH)	2	3	4	5	4	3	4	5	4	3	4	5	4	3	4	5	4	3
L4	SPEED (KPH)	2	4	5	6	5	4	5	6	5	4	5	6	5	4	5	6	5	3
L5	SPEED (KPH)	2	5	6	7	6	5	6	7	6	5	6	7	5	6	7	6	5	3
L6	SPEED (KPH)	3	6	7	8	7	6	7	8	7	6	7	8	7	6	7	8	7	4
L7	SPEED (KPH)	3	7	8	9	8	7	8	9	8	7	8	9	8	7	8	9	8	4
L8	SPEED (KPH)	3	8	9	10	9	8	9	10	9	8	9	10	9	8	9	10	8	4

P7. MOUNTAIN CLIMB

INTERVAL		1	2	3	4	5	6	7	8	9	10	11	12	13	14	15	16	17	18
L1	INCLINE LEVEL	0	1	1	2	2	3	3	4	4	5	6	7	8	7	6	4	2	0
	SPEED (KPH)	1	1	2	2	3	3	3	4	4	4	3	3	3	2	2	2	1	1
L2	INCLINE LEVEL	0	1	2	2	3	3	4	4	5	6	7	8	9	8	6	4	2	0
	SPEED (KPH)	1	1	2	2	3	3	3	4	4	4	3	3	3	2	2	2	1	1
L3	INCLINE LEVEL	1	1	2	3	3	4	4	5	6	7	8	9	10	9	8	6	4	2
	SPEED (KPH)	1	1	2	2	3	3	3	4	4	4	3	3	3	2	2	2	1	1
L4	INCLINE LEVEL	1	2	2	3	3	4	5	6	7	8	9	10	11	10	8	7	5	3
	SPEED (KPH)	2	2	3	3	4	4	4	5	5	4	4	4	3	3	3	2	2	2
L5	INCLINE LEVEL	1	2	3	4	5	6	7	8	9	9	10	11	12	11	10	8	6	4
	SPEED (KPH)	2	2	3	3	4	4	4	5	5	4	4	4	3	3	3	2	2	2
L6	INCLINE LEVEL	2	2	3	4	5	6	7	8	9	10	11	12	13	12	10	8	6	4
	SPEED (KPH)	2	2	3	3	4	4	4	5	5	4	4	4	3	3	3	2	2	2
L7	INCLINE LEVEL	2	3	4	5	6	7	8	9	10	11	12	13	14	13	10	8	6	4
	SPEED (KPH)	2	2	4	4	5	5	5	6	6	6	5	5	4	4	4	2	2	2
L8	INCLINE LEVEL	3	4	5	6	7	8	9	10	11	12	13	14	15	13	10	8	6	4
	SPEED (KPH)	2	2	4	4	5	5	5	6	6	6	5	5	4	4	4	2	2	2

P8. HILL RUN

INTERVAL		1	2	3	4	5	6	7	8	9	10	11	12	13	14	15	16	17	18
L1	INCLINE LEVEL	0	0	1	1	2	2	2	3	3	3	4	4	5	5	4	3	2	1
	SPEED (KPH)	2	2	2	3	3	3	5	5	7	7	9	9	10	8	8	6	4	2
L2	INCLINE LEVEL	0	0	1	1	2	2	2	3	3	3	4	4	5	6	5	3	2	1
	SPEED (KPH)	2	2	2	4	4	4	6	6	6	8	8	10	10	8	8	6	4	2
L3	INCLINE LEVEL	0	0	1	1	2	2	3	3	3	4	4	5	5	6	5	3	2	1
	SPEED (KPH)	2	2	4	4	4	6	6	6	8	8	10	10	12	10	8	6	4	2
L4	INCLINE LEVEL	0	1	1	2	2	3	3	4	4	4	5	5	6	7	6	5	3	2
	SPEED (KPH)	2	2	4	4	6	6	8	8	8	10	10	10	12	12	10	7	5	3
L5	INCLINE LEVEL	1	1	2	2	3	3	4	4	5	5	6	6	7	8	7	6	3	2
	SPEED (KPH)	2	4	6	6	6	6	8	8	8	10	10	12	13	12	10	7	5	3
L6	INCLINE LEVEL	1	2	3	4	4	4	5	5	6	6	7	8	8	8	7	6	3	2
	SPEED (KPH)	2	4	6	6	6	6	8	8	10	10	12	13	13	12	10	7	5	3
L7	INCLINE LEVEL	1	2	3	4	5	6	6	7	7	8	8	9	10	10	9	6	3	2
	SPEED (KPH)	2	4	6	6	8	8	10	10	12	13	13	14	13	12	10	7	5	3
L8	INCLINE LEVEL	1	2	3	4	6	6	7	7	8	8	9	9	10	12	9	6	3	2
	SPEED (KPH)	2	4	6	8	10	10	12	12	13	13	14	14	13	12	10	7	5	3

TRAINING IN CUSTOM USER PROGRAM MODE (U-1-U-3):

There are 3 CUSTOM USER programs available for setting your own pre-set program. Press the PROG (PROGRAM) button until you see the screen display U-1, U-2, or U-3. Press the SPEED + or SPEED − button to set target training program time. Each increment is 1 minute. The pre-set target time range is from 5:00 to 99:00 minutes. Press the MODE button to confirm the chosen program and then press the SPEED + or SPEED − button to set speed for the first interval of user program. Press the INCLINE ▲ or INCLINE ▼ button to set incline level for the first interval of user program. Press the MODE button to confirm the speed and incline level for the first interval of user program. Repeat above steps to set the speed and incline level for all 18 intervals. After setting all the speed and incline levels press the START button to start exercise, the computer screen will countdown 3 seconds before the running belt starts moving. The running speed and incline level will change automatically according to your own pre-set program throughout the workout. When the pre-set training target time counts down to 0:00, the computer will beep to alert you and the treadmill will stop automatically.

TRAINING IN BODY FAT CALCULATOR PROGRAM MODE:

Press the PROG (PROGRAM) button to select FAT (Body Fat Calculator Program). The computer screen will display FAT. Press the MODE button to enter into the Body Fat Calculator Program Mode. The computer screen will display F1 (gender) and 1 (male). Press the SPEED + or SPEED − button to set user's gender (1 indicates male and 2 indicates female). Press the MODE button to confirm the gender and the computer screen will display F2 (age) and 25 (year-old). Press the SPEED + or SPEED − button to set user's age. Press the MODE button to confirm the age and the computer screen will display F3 (height) and 170 (cm). Press the SPEED + or SPEED − button to set user's height. Press the MODE button to confirm the height and the computer screen will display F4 (weight) and 70 (kg). Press the SPEED + or SPEED − button to set user's weight. Press the MODE button to confirm weight and the computer screen will display F5 (body fat ratio) and ----. Please grip the handlebar pulse sensors with both hands for a few seconds and the computer screen will display your body fat ratio.

NOTE: Body Fat Ratio is an estimate based on the gender, age, height, and weight input, and is to be used as a guide only.

Gender	Standard Body Fat (<30 Years Old)	Standard Body Fat (> 30 Years Old)	High Body Fat
Male	14-20%	17-23%	>25%
Female	17-24%	20-27%	>30%

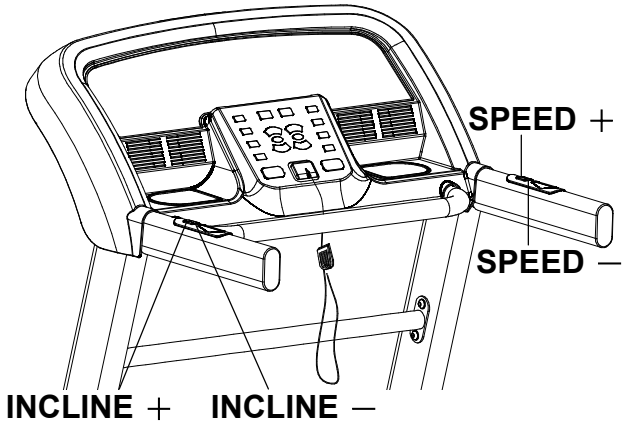

INCLINE +: Press the INCLINE + button on the Left Handrail to increase incline level.

INCLINE −: Press the INCLINE − button on the Left Handrail to decrease incline level.

SPEED +: Press the SPEED + button on the Right Handrail to increase speed.

SPEED −: Press the SPEED − button on the Right Handrail to decrease speed.

COMPATIBLE FITNESS APPLICATION

DOWNLOAD THE FITSHOW APPLICATION

You can install the FitShow app on your mobile device using a QR code. Scan the QR code to download and install the app.
Alternatively, you can search FitShow app in the Google Play Store (for Android systems) or App Store (for iOS systems) and then download the app.

Android **iOS**

LOGGING INTO THE APPLICATION

After downloading app, tap on the FitShow icon on the screen to open the app.
To connect app via Bluetooth, please go to your mobile device's settings section and turn on the BLUETOOTH function. Make sure that Bluetooth is enabled on your mobile device and the treadmill is within the Bluetooth connection range of your mobile device.

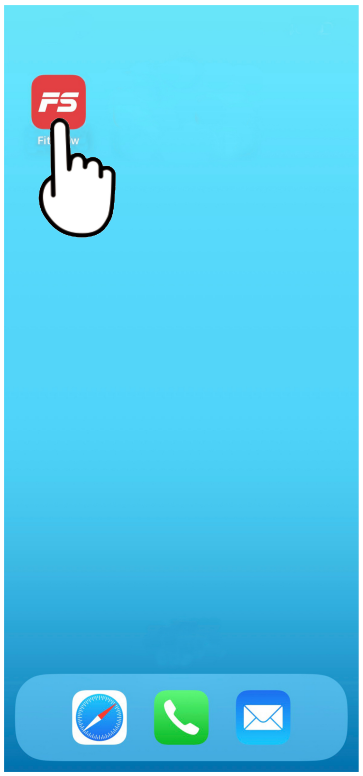

NOTE: We are unable to provide a complete operational guide for the application within this manual, as the application will be subject to periodic updates. These updates may alter the operation or design of the application. Please refer to the instructions within the specific application download store for guidance.
We do not provide any services for the Fitshow App. If you encounter any issues while using the Fitshow App, please contact the application developer.

The **BLUETOOTH APP** indicator lights up on the computer screen when the BLUETOOTH connection is established.

NOTE: All the activity information from this app may vary from the computer; user can choose either one of them to help you get the best results.

ERROR MESSAGES

Error Messages	Potential Cause	Things to Check
E1	The computer console did not receive any feedback within 30 seconds from the power control board.	Please re-check and/or re-connect the cable joint between the computer console and the power control board.
E2	The power control board did not receive any input voltage from the motor.	Please re-check and/or re-connect the cable joint between the motor and the power control board.
E3	No speed sensoring information, problem on speed sensor.	Please check the speed sensor. Please re-check and/or re-connect the sensor cable.
E4	Defection on cables between the incline motor and the power control board.	Please re-check and/or re-connect the cable joint between the incline motor and the power control board.
E5	Overload of the input current of motor that triggered the power control board protection.	Please check the resistance of the running belt.
E6	Overload of the input voltage of motor that triggered the power control board protection. Defection on motor.	Please check the input power. Please re-check and/or re-connect the cables for motor.
---	Security protection.	Please check the Safety Tether Key is placed on right position and fitted properly.

CARE, MAINTENANCE & TROUBLESHOOTING GUIDE

WARNING: To prevent electrical shock, please turn off and unplug the treadmill before cleaning or performing routine maintenance.

WARNING: Always check the wear and tear components like storage safety latch tube and running belt to prevent injury.

CLEANING

After each exercise, ensure that the unit is wiped down and any sweat is removed from the unit.

The treadmill can be cleaned with a soft cloth and mild detergent. Do not use abrasives or solvents. Be careful not to get excessive moisture on the display panel as this might damage the unit and create an electrical hazard.

Please keep the treadmill, especially the computer console, out of direct sunlight to prevent damage to the screen.

STORAGE

Store the treadmill in a clean and dry indoor environment. Never leave or use the unit outdoors. Ensure the master power switch is off and the power cord is un-plugged from wall outlet.

TROUBLESHOOTING GUIDE

Problem	Potential Causes	Corrections
Treadmill will not start.	1. Treadmill not plugged in. 2. Safety Tether Key is not correctly installed. 3. Circuit breaker in the house has been tripped. 4. Treadmill circuit breaker has been tripped.	1. Plug the power cord into a wall outlet. 2. Reinstall the Safety Tether Key. 3. Reset the circuit breaker, or call an electrician to replace the circuit breaker. 4. Wait 5 minutes and then try to restart the treadmill.
Belt slips.	Belt not tight enough.	Adjust belt tension.
Belt hesitates when stepped on.	1. Not enough lubrication applied onto the running deck. 2. Belt is too tight.	1. Apply lubricant. 2. Adjust belt tension.
Belt is not centred.	Running belt tension not even across the rear roller.	Centre the belt.

BELT ADJUSTMENT

The running belt is pre-adjusted to the running deck at the factory, but after prolonged use it can stretch and require readjustment. To adjust the belt, turn on the main power switch of the treadmill and let the belt run at a speed of 2-4 KPH. Use the 6 mm Allen Wrench provided to turn the rear roller adjustment bolts in order to centre the belt. If the running belt is shifting to the left, turn the left adjustment bolt 1/4 turn clockwise, and the running belt should start to correct itself.

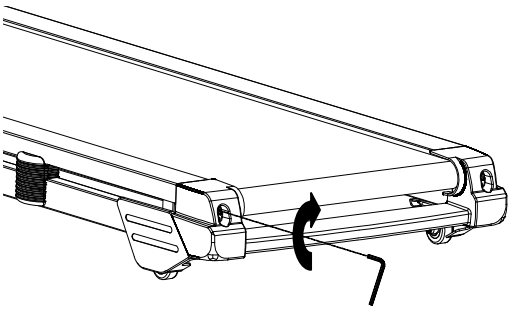

Tool:

Allen Wrench 6 mm

If the running belt is shifting to the right, then turn the right adjustment bolt 1/4 turn clockwise, and the belt should start to correct itself. Keep turning the adjustment bolts until the running belt is properly centered.

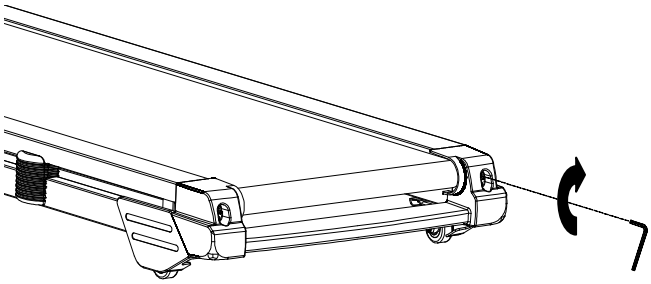

Tool:

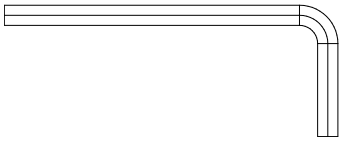

Allen Wrench 6 mm

If the running belt is slipping during use, turn off and unplug the treadmill. Using the 6 mm Allen Wrench provided, turn both left and right rear roller adjustment bolts 1/4 turn clockwise, then turn the main power switch back on and run the treadmill at a speed of 2-4 KPH. Run on to the running belt to determine if the belt is still slipping. Repeat this procedure until the belt no longer slips.

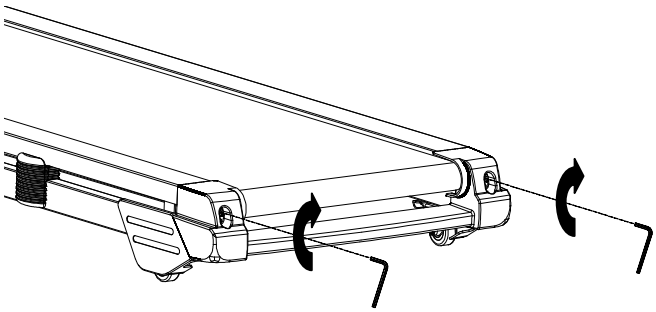

Tool:

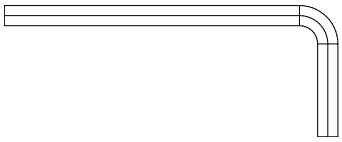

Allen Wrench 6 mm

LUBRICATION

Lubricating under the running belt will ensure superior performance and extend its life expectancy. After the first 25 hours of use (or 2-3 months) apply some lubricant, and repeat for every following 50 hours of use (or 5-8 months).

How to check running belt for proper lubrication
Lift one side of the running belt and feel the top surface of the running deck.
If the surface is slick to the touch, then no further lubrication is required.
If the surface is dry to the touch, apply some lubricant.

How to apply lubricant
Lift one side of running belt.
Pour some lubricant under the **centre** of the running belt on the top surface of the **running deck**.
Run on the treadmill at a slow speed for 3 to 5 minutes to evenly distribute lubricant.
NOTE: DO NOT over lubricate running deck. Any excess lubricant that comes out should be wiped off.

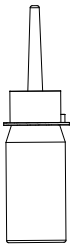

Lubricant
1 PC

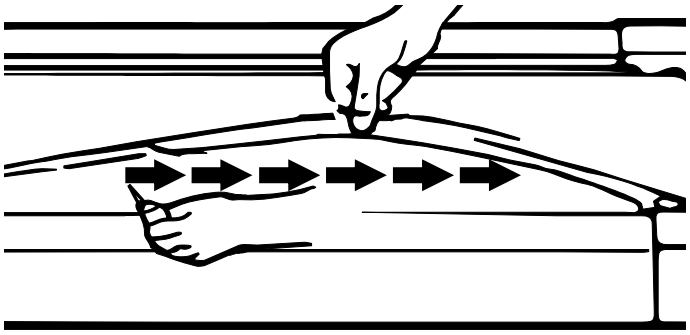

EMERGENCY STOP

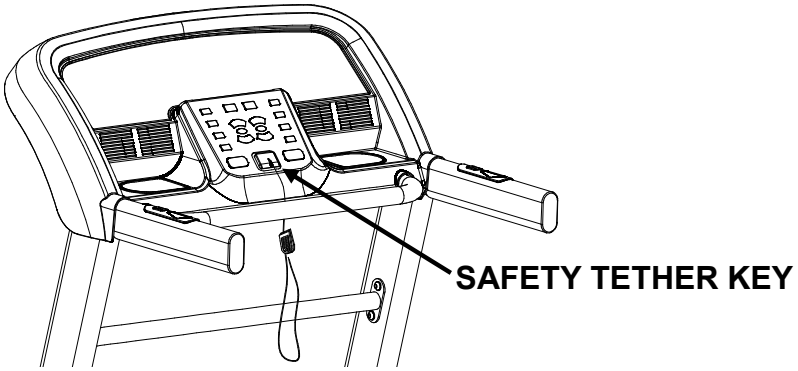

Before beginning a workout session ensure that the Safety Tether Key is properly placed onto the Computer Console and the Safety Clip is securely attached to an article of your clothing. If you fall the clip will pull out the **SAFETY TETHER KEY** from the Computer Console and the running belt will stop immediately for emergency stop, helping to prevent injury.
Replaced the Safety Tether Key onto the Computer Console. Press the START button to begin exercise again.

WARM UP AND COOL DOWN ROUTINE

WARMING UP is an important part of any workout. Its purpose is to prepare your body for exercise and minimize injuries. Warm up for two to five minutes before aerobic exercise. Warming up should prepare your body for more strenuous exercise by heating up muscles, stretching them, and increasing circulation and pulse rate, delivering more oxygen to your muscles.

COOLING DOWN at the end of your workout, repeat these exercises to reduce soreness in tired muscles. The purpose of cooling down is to return the body to its resting state at the end of each exercise session. A proper cool-down slowly lowers your heart rate and allows blood to return to the heart from the muscles.

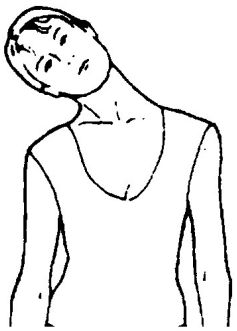

HEAD ROLLS
Rotate your head to the right, feeling a stretching sensation up the left side of your neck. Rotate your head back, stretching your chin to the ceiling and opening your mouth. Rotate your head to the left. Drop your head to your chest.

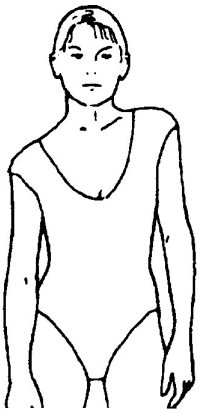

SHOULDER LIFTS
Lift your right shoulder toward your ear. Lift your left shoulder up as you lower your right shoulder.

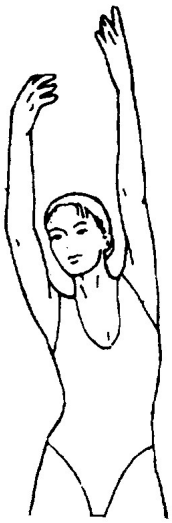

SIDE STRETCHES
Open your arms to the side and lift them until they are over your head. Reach your right arm as far toward the ceiling as you can. Repeat the action with your left arm.

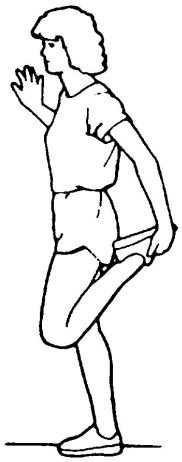

QUADRICEPS STRETCH
With one hand against a wall for balance, reach behind you and pull your right foot up. Bring your heel as close to your buttocks as possible. Hold for 15 counts. Repeat with the left foot.

INNER THIGH STRETCH
Sit with the soles of your feet together and your knees pointing outward. Pull your feet as close to your groin as possible. Gently push your knees toward the floor. Hold for 15 counts.

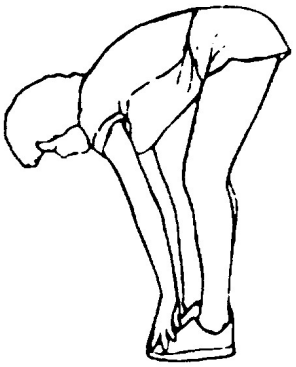

TOE TOUCHES
Slowly bend forward from your waist, letting your back and shoulders relax as you stretch toward your toes. Reach as far as you can and hold for 15 counts.

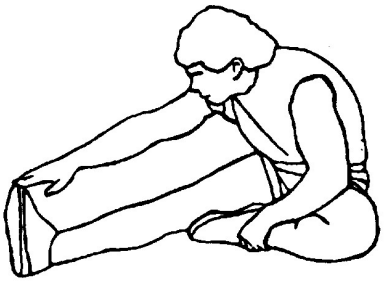

HAMSTRING STRETCHES
Extend your right leg. Rest the sole of your left foot against your right inner thigh. Stretch toward your toe as far as possible. Hold for 15 counts. Relax and then repeat with left leg.

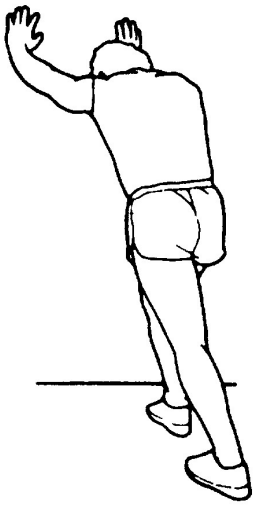

CALF/ACHILLES STRETCH
Lean against a wall with your left leg in front of the right and your arms forward. Keep your right leg straight and the left foot on the floor; then bend the left leg and lean forward by moving your hips toward the wall. Hold, then repeat on the other side for 15 counts.